Legend

PIN			Function		PIN		
LetsTrust_Pin 1	Pi_Pin 17	Pi_3V3	VCC +3V3	$\overline{\text{RESET}}$	Pi_GPIO_24	Pi_Pin 18	LetsTrust_Pin 2
LetsTrust_Pin 3	Pi_Pin 19	Pi_GPIO_10	MOSI	GND	Pi_GND	Pi_Pin 20	LetsTrust_Pin 4
LetsTrust_Pin 5	Pi_Pin 21	Pi_GPIO_09	MISO	$\overline{\text{PIRQ}}$	Pi_GPIO_25	Pi_Pin 22	LetsTrust_Pin 6
LetsTrust_Pin 7	Pi_Pin 23	Pi_GPIO_11	SLCK	$\overline{\text{CS_0}}$(NC)	Pi_GPIO_8	Pi_Pin 24	LetsTrust_Pin 8
LetsTrust_Pin 9	Pi_Pin 25	Pi_GND	GND	$\overline{\text{CS_1}}$	Pi_GPIO_7	Pi_Pin 26	LetsTrust_Pin 10

Logic

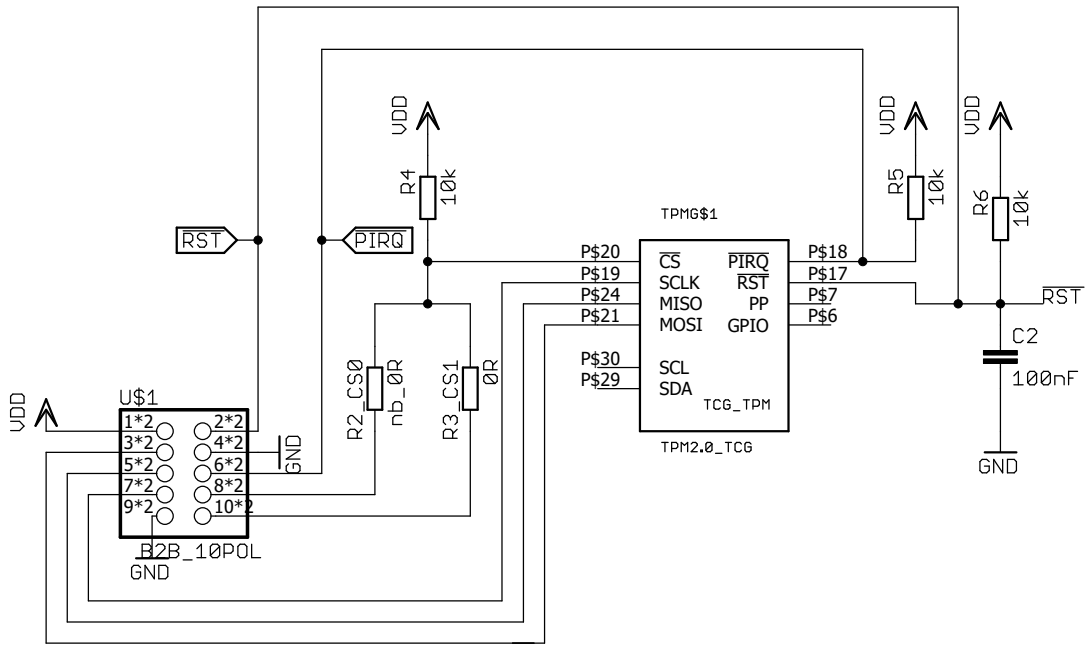

Supply

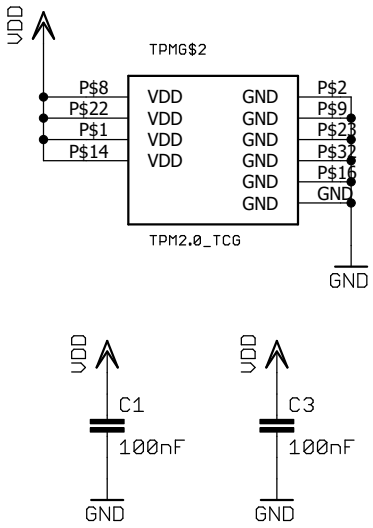

Only for production

CC BY-SA 4.0

Trust V2.3

09.05.2024 13:37

Sheet: 1/1