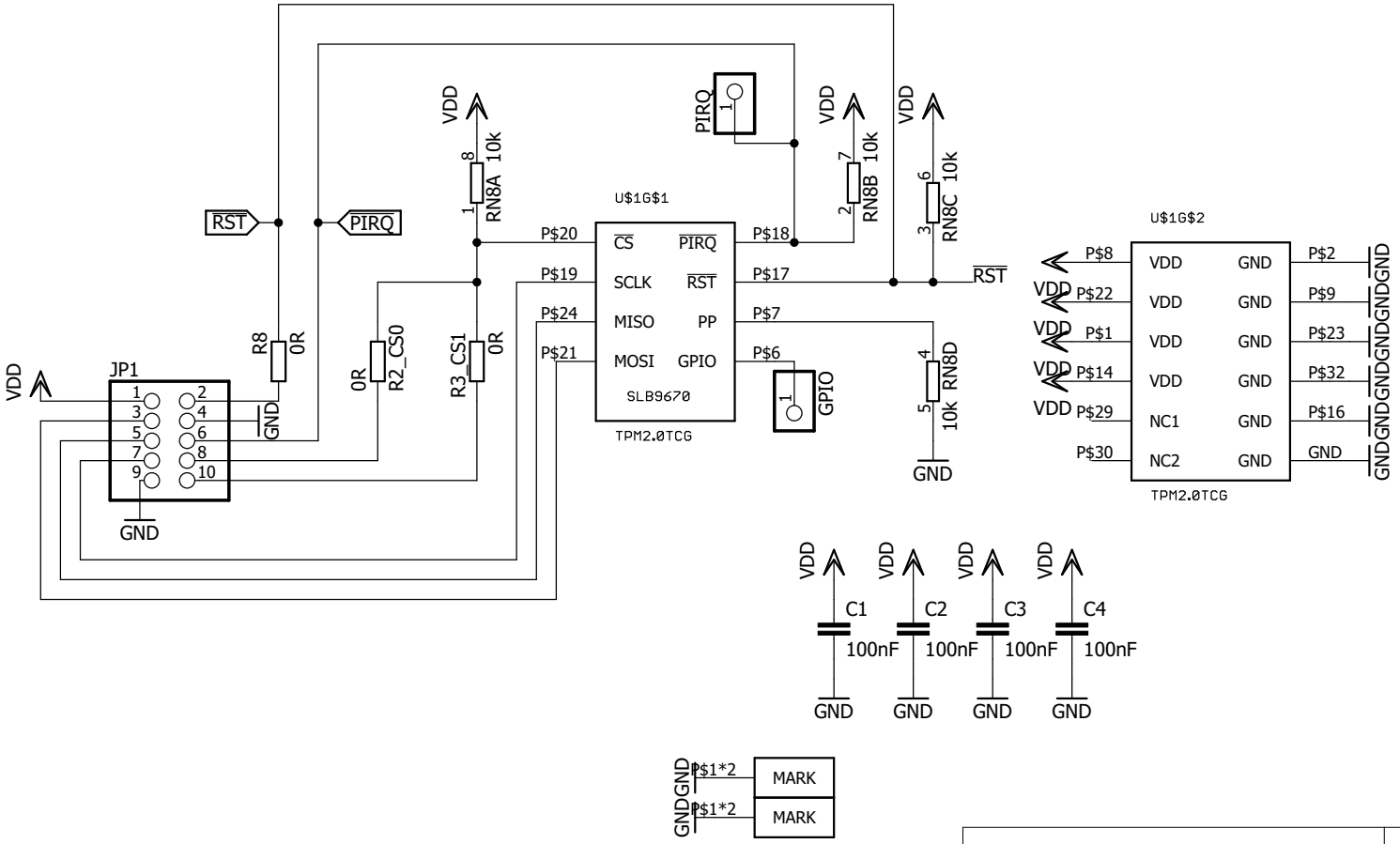

Trust V1.4

17.05.2017 01:20

Sheet: 1/1